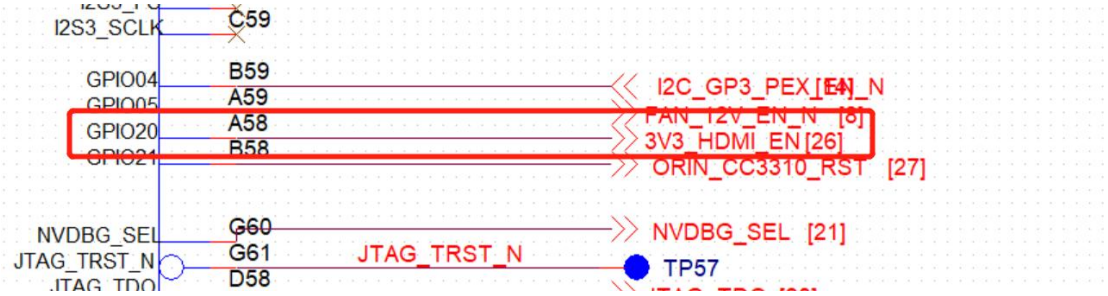
I2S3_SCLK
C59
GPIO04
B59
GPIO05
A59
GPIO20
A58
GPIO21
B58
I2C_GP3_PEX_[14]_N
FAN_12V_EN_N [8]
3V3_HDMI_EN [26]
ORIN_CC3310_RST [27]
NVDBG_SEL
G60
NVDBG_SEL [21]
JTAG_TRST_N
G61
JTAG_TRST_N
TP57
JTAG_TDO
D58

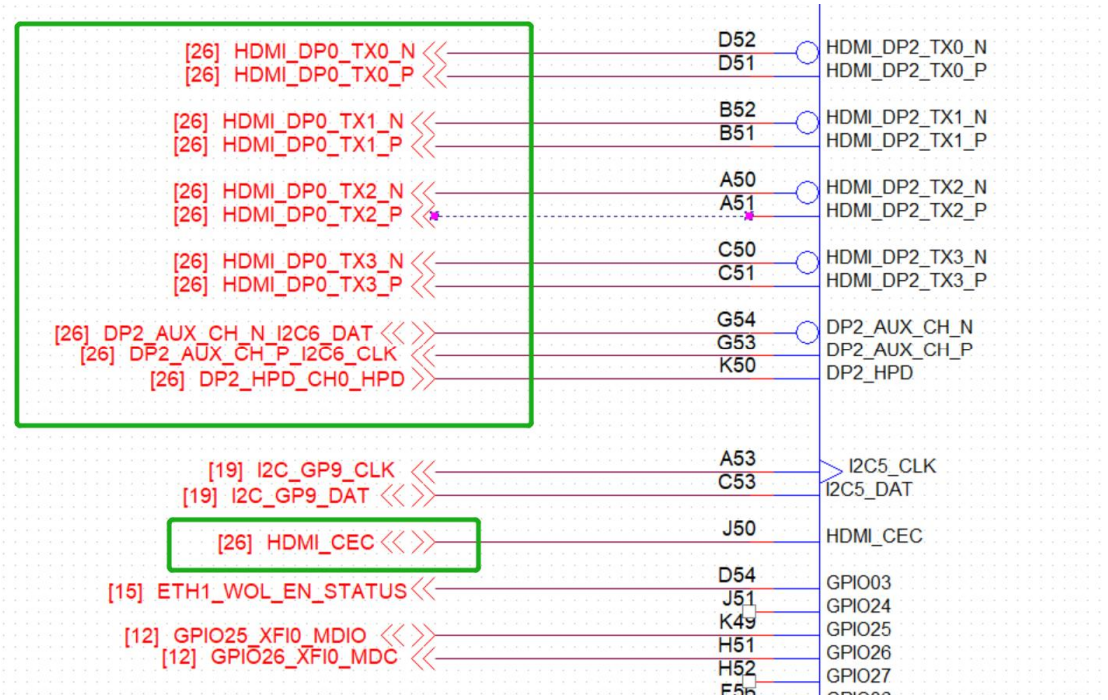
[26] HDMI_DP0_TX0_N
[26] HDMI_DP0_TX0_P
D52
D51
HDMI_DP2_TX0_N
HDMI_DP2_TX0_P
[26] HDMI_DP0_TX1_N
[26] HDMI_DP0_TX1_P
B52
B51
HDMI_DP2_TX1_N
HDMI_DP2_TX1_P
[26] HDMI_DP0_TX2_N
[26] HDMI_DP0_TX2_P
A50
A51
HDMI_DP2_TX2_N
HDMI_DP2_TX2_P
[26] HDMI_DP0_TX3_N
[26] HDMI_DP0_TX3_P
C50
C51
HDMI_DP2_TX3_N
HDMI_DP2_TX3_P
[26] DP2_AUX_CH_N_I2C6_DAT
[26] DP2_AUX_CH_P_I2C6_CLK
[26] DP2_HPD_CH0_HPD
G54
G53
K50
DP2_AUX_CH_N
DP2_AUX_CH_P
DP2_HPD
[19] I2C_GP9_CLK
[19] I2C_GP9_DAT
A53
C53
I2C5_CLK
I2C5_DAT
[26] HDMI_CEC
J50
HDMI_CEC
[15] ETH1_WOL_EN_STATUS
D54
GPIO03
J51
GPIO24
[12] GPIO25_XFI0_MDIO
K49
GPIO25
[12] GPIO26_XFI0_MDC
H51
GPIO26
H52
GPIO27